液晶显示模块使用手册

FM16230

深圳市勤正达电子有限公司

地址：深圳市龙华区大浪街道华宁路颐丰华产业园创客中心 2 楼

电话：0755－81798090

传真：0755－81798636

1.FUNCTION & FEATURES

ITEM	Normal dimensions
Display Format	8characters*1 lines 5*7 dots +ICON
Module dimension	80.0(W)*80.0(H)*13.6（MAX）(T)
Viewing area	57.0(W)*55.8(H)
Duty/bias	1/16Duty, 1/5Bias AND 1/4DUTY, 1/3BIAS
LCD mode	STN / Negative
Viewing direction	6 O'clock
Driver	HT1622 / SPLC780D1

2.BLOCK DIAGRAM

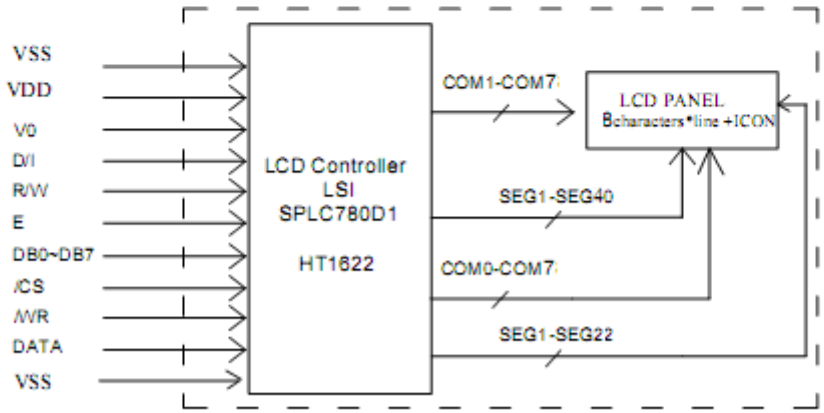

3.DIMENSIONAL OUTLINE OR TABLE

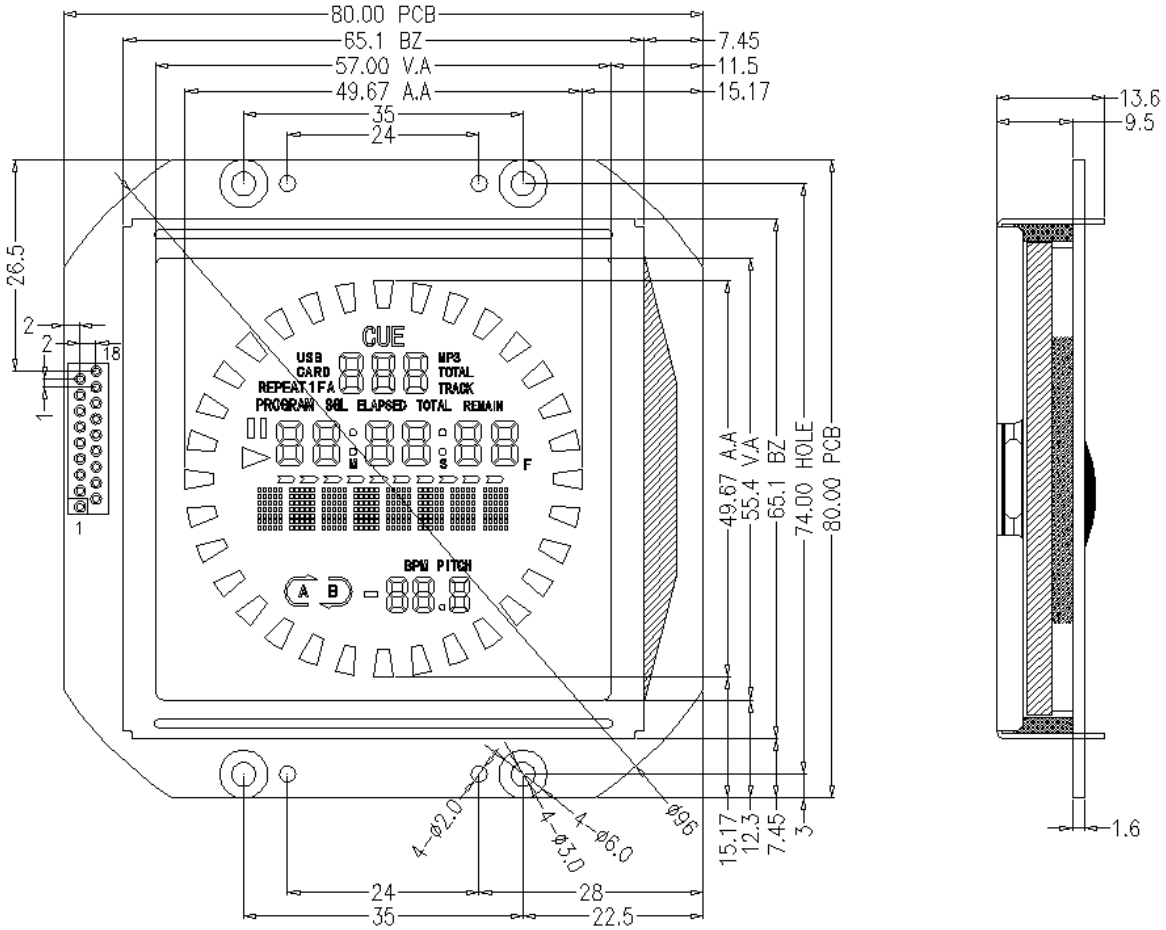

NOTES:

1. DISPLAY TYPE:	STN/BLUE
2. LCD OPERATING VOLTAGE:	5.0V
3. OPERATING TEMPERATURE:	0°C~50°C
4. STORAGE TEMPERATURE:	−10°C~60°C
5. DRIVE MODE:	1/8D,1/4B
6. VIEWING DIRECTION:	6:00
7. POLARIZER TYPE:	TRANSMISSIVE,NEGATIVE
8. CONNECTOR:	ZEBRA
9. BACK LIGHT:	WHITE

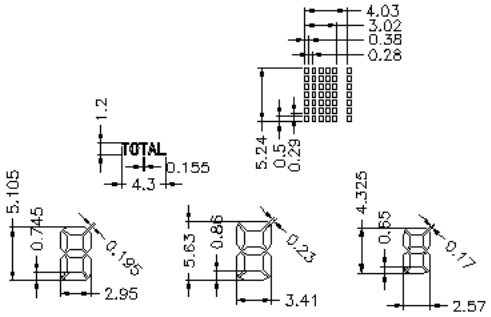

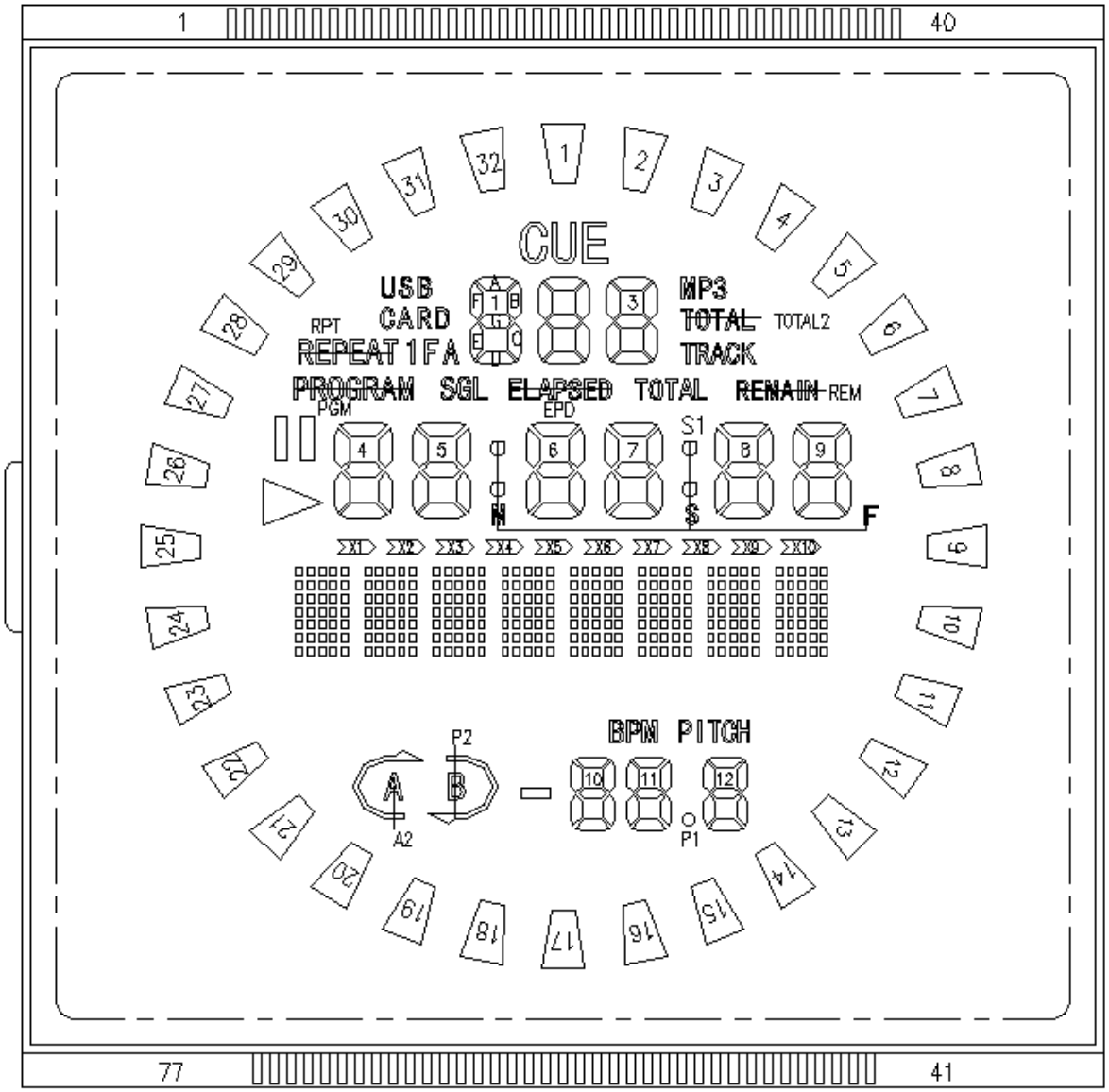

PIN	41	42	43	44	45	46	47	48	49	50	51	40	39	38	37	36	35	34	33	32	31	30
	S1	S2	S3	S4	S5	S6	S7	S8	S9	S10	S11	S12	S13	S14	S15	S16	S17	S18	S19	S20	S21	S22
C1	11	9C	9D	8C	8D	7C	7D		X7	X2		10		6C	6D	5C	5D	4C	4D	X1		23
C2	12	9G	9E	8G	8E	7G	7E		X6	X3		9		6G	6E	5G	5E	4G	4E	▷		24
C3	13	9B	9F	8B	8F	7B	7F		X5	X4		8		6B	6F	5B	5F	4B	4F	▯▯		25
C4	14		9A		8A		7A			S1		7	REM	TOTAL	6A	EPD	5A	SGL	4A	PGM		26
C5	15	12B	12A	11B	11A	10B	10A	PITCH	X8			6	TRACK	3C	3D	2C	2D	1C	1D	A	F	27
C6	16	12G	12F	11G	11F	10G	10F	BMP	X9			5	TOTAL2	3G	3E	2G	2E	1G	1E	CARD	1	28
C7	17	12C	12E	11C	11E	10C	10E	▭	X10			4	MP3	3B	3F	2B	2F	1B	1F	USB	RPT	29
C8	18	19	12D	P1	11D	20	10D	P2	A2	22	21	3	2	1	3A	CUE	2A	32	1A	31		30

4.PIN DESCRIPTION

Pin no.	Symbol	Function
1	VSS	Ground
2	VDD	Power Supply +5V
3	V0	Contrast Adjustment
4	D/I	Register Selection Input 1 = Data Register 0 = Instruction Register (for WRITE) Busy flag address counter (for READ)
5	R/W	Read/Write signal input is used to select the read/write mode High = Read mode, Low = Write mode
6	E	Start enable signal to read or write the data
7~14	DB0~DB7	LCD Data Port. Used for data transfer between the MPU and the LCD module. DB7 can be used as a busy flag.
15	/CS	Chip select
16	/WR	Write clock input
17	DATA	Serial data input
18	VSS	Ground

5.MAXIMUM ABSOLUTE LIMIT (T=25℃)

Item	Symbol	Standard value			Unit
		Min.	typ.	max.	
Power supply voltage for logic	V_{DD}	-0.3	5.0	5.3	V
Driver supply voltage for LCD	V_{LCD}	-0.3	4.5	4.8	V
Operating temperature	Topr	0	-	+50	°C
Storage temperature	Tstg	-10	-	+60	°C

Note: Voltage greater than above may damage the module

6.ELECTRICAL CHARACTERISTICS.

6-1DC Characteristics(T=25°C)

Item	Symbol	Min	Typ	Max	Unit	Test condition
Operating voltage	V_{DD}	-	5.0	-	V	-
Input high voltage	V_{IH1}	2.5	-	VDD	V	PINS(E,RS,R/W,DB0-DB7)
Input low voltage	V_{IL1}	-0.3	-	0.6	V	
Input high voltage	V_{IH2}	VDD-1	-	VDD	V	PIN OSC1
Input low voltage	V_{IL2}	-0.2	-	1.0	V	PIN OSC1
Output high voltage	V_{OH1}	2.4	-	VDD	V	I_{OH}=-0.1mA,PINS:DB0-DB7
Output low voltage	V_{OL1}	-	-	0.4	V	I_{OL}=0.1mA,PINS:DB0-DB7
Output high voltage	V_{OH2}	0.9VDD	-	VDD	V	I_{OH}=-40uA,PINS:CL1,CL2,M,D
Output low voltage	V_{OL2}	-	-	0.1VDD	V	I_{OL}=-40uA,PINS:CL1,CL2,M,D

6-2 AC Characteristics

Write Mode

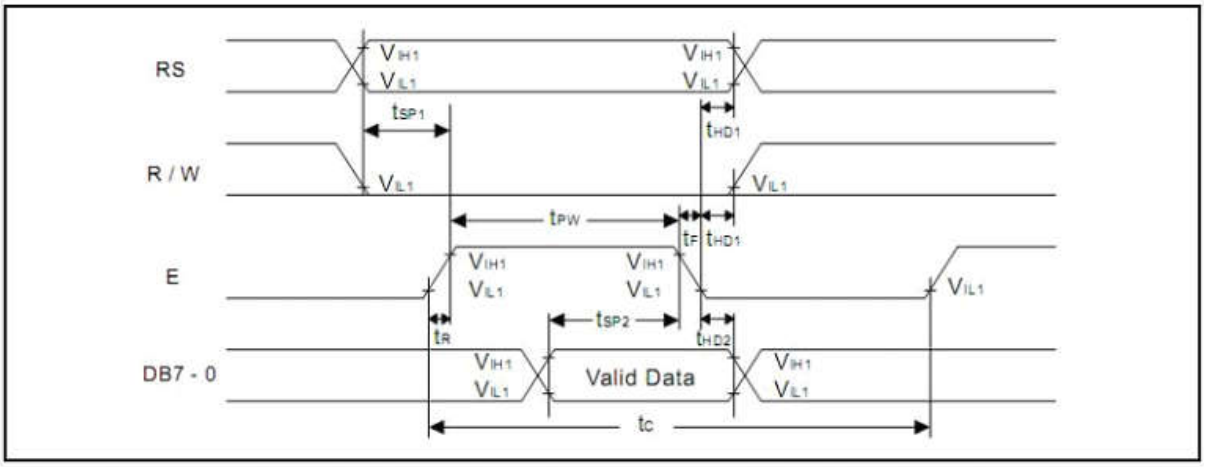

Read Mode

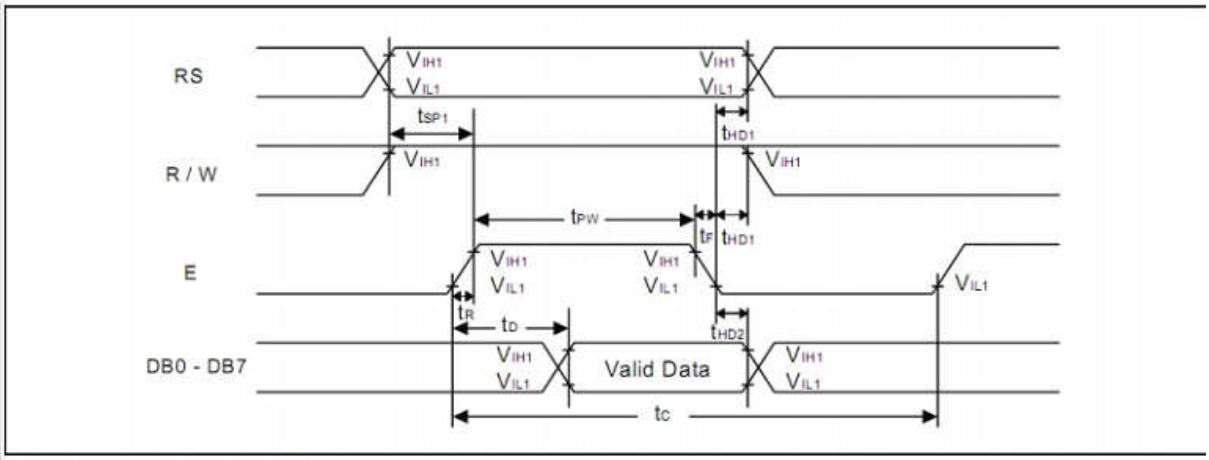

Interface mode with LCD Driver

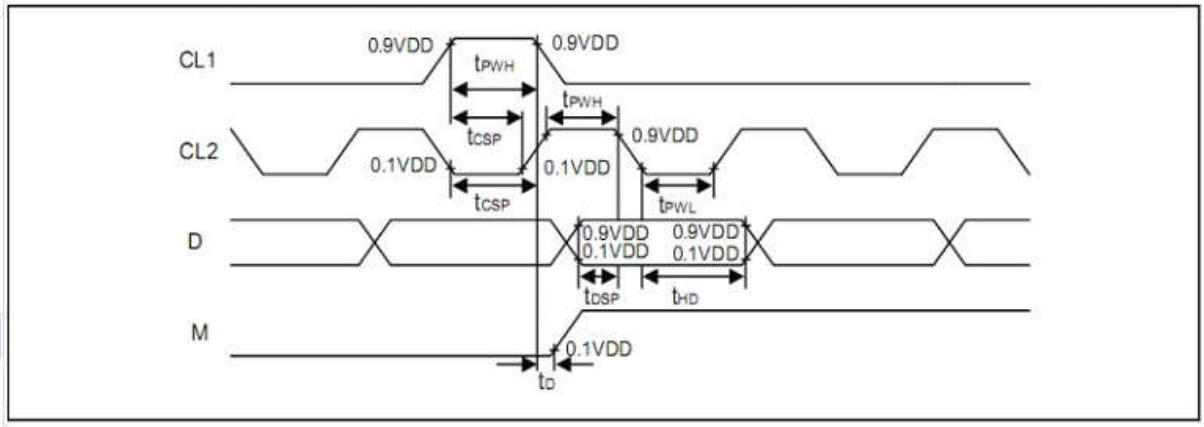

6-3 AC Characteristics (VDD=5V)

Symbol	Characteristics	Test Condition	Min.	Typ.	Max.	Unit
Read/Write mode						
T_C	Enable Cycle Time	Pin E	500	-	-	ns
T_{PW}	Enable Pulse Width	Pin E	230	-	-	ns
T_W	Enable Pulse Width	Pin E	230	-	-	ns
T_R, T_F	Enable Rise/Fall	Pin E	-	-	20	ns
T_{SP1}	Address Setup Time	Pins: RS, RW, E	40	-	-	ns
T_{HD1}	Address Hold Time	Pins: RS, RW, E	10	-	-	ns
T_{SP2}	Data Setup Time	Pins: DB0 - DB7	80	-	-	ns
T_{HD2}	Data Hold Time	Pins: DB0 - DB7	10	-	-	ns
T_D	Data Outpt DelayTime	Pins: DB0 - DB7	-	-	120	ns
Interface Mode with LCD Driver						
T_{PWH}	Clock Pulse with high	Pins: CL1, CL2	800	-	-	ns
T_{PWL}	Clock Pulse with low	Pins: CL1, CL2	800	-	-	ns
T_{CSP}	Clock Setup Time	Pins: CL1, CL2	500	-	-	ns
T_{DSP}	Data Setup Time	Pin: D	300	-	-	ns
T_{HD}	Data Hold Time	Pin: D	300	-	-	ns
T_D	M Delay Time	Pin: M	-	-	1000	ns

7.Instruction Description

Instruction	Instruction Code										Description	Execution time (Temp = 25℃)		
	RS	RW	DB7	DB6	DB5	DB4	DB3	DB2	DB1	DB0		Fosc= 190KHz	Fosc= 270KHz	Fosc= 350KHz
Clear Display	0	0	0	0	0	0	0	0	0	1	Write "20H" to DDRAM and set DDRAM address to "00H" from AC	2.16ms	1.52ms	1.18ms
Return Home	0	0	0	0	0	0	0	0	1	-	Set DDRAM address to "00H" from AC and return cursor to its original position if shifted. The contents of DDRAM are not changed.	2.16ms	1.52ms	1.18ms
Entry Mode Set	0	0	0	0	0	0	0	1	I/D	S	Assign cursor moving direction and enable the shift of entire display	53μs	38μs	29μs
Display ON/ OFF Control	0	0	0	0	0	0	1	D	C	B	Set display (D), cursor(C), and blinking of cursor(B) on/off control bit.	53μs	38μs	29μs
Cursor or Display Shift	0	0	0	0	0	1	S/C	R/L	-	-	Set cursor moving and display shift control bit, and the direction, without changing of DDRAM data.	53μs	38μs	29μs
Function Set	0	0	0	0	1	DL	N	F	-	-	Set interface data length (DL: 8-bit/4-bit), numbers of display line (N: 2-line/1-line) and, display font type (F:5x10 dots/5x8 dots)	53μs	38μs	29μs
Set CGRAM Address	0	0	0	1	AC5	AC4	AC3	AC2	AC1	AC0	Set CGRAM address in address counter.	53μs	38μs	29μs
Set DDRAM Address	0	0	1	AC6	AC5	AC4	AC3	AC2	AC1	AC0	Set DDRAM address in address counter	53μs	38μs	29μs
Read Busy Flag and Address Counter	0	1	BF	AC6	AC5	AC4	AC3	AC2	AC1	AC0	Whether during internal operation or not can be known by reading BF. The contents of address counter can also be read.			
Write Data to RAM	1	0	D7	D6	D5	D4	D3	D2	D1	D0	Write data into internal RAM (DDRAM/CGRAM).	53μs	38μs	29μs
Read Data from RAM	1	1	D7	D6	D5	D4	D3	D2	D1	D0	Read data from internal RAM (DDRAM/CGRAM).	53μs	38μs	29μs

Name	ID	Command Code	D/C	Function	Def.
READ	1 1 0	A5A4A3A2A1A0D0D1D2D3	D	Read data from the RAM	
WRITE	1 0 1	A5A4A3A2A1A0D0D1D2D3	D	Write data to the RAM	
READ-MODIFY-WRITE	1 0 1	A5A4A3A2A1A0D0D1D2D3	D	READ and WRITE to the RAM	
SYS DIS	1 0 0	0000-0000-X	C	Turn off both system oscillator and LCD bias generator	Yes
SYS EN	1 0 0	0000-0001-X	C	Turn on system oscillator	
LCD OFF	1 0 0	0000-0010-X	C	Turn off LCD bias generator	Yes
LCD ON	1 0 0	0000-0011-X	C	Turn on LCD bias generator	
TIMER DIS	1 0 0	0000-0100-X	C	Disable time base output	
WDT DIS	1 0 0	0000-0101-X	C	Disable WDT time-out flag output	
TIMER EN	1 0 0	0000-0110-X	C	Enable time base output	
WDT EN	1 0 0	0000-0111-X	C	Enable WDT time-out flag output	
TONE OFF	1 0 0	0000-1000-X	C	Turn off tone outputs	Yes
TONE ON	1 0 0	0000-1001-X	C	Turn on tone outputs	
CLR TIMER	1 0 0	0000-11XX-X	C	Clear the contents of time base generator	
CLR WDT	1 0 0	0000-111X-X	C	Clear the contents of WDT stage	
XTAL 32K	1 0 0	0001-01XX-X	C	System clock source, crystal oscillator	
RC 256K	1 0 0	0001-10XX-X	C	System clock source, on-chip RC oscillator	Yes
EXT 256K	1 0 0	0001-11XX-X	C	System clock source, external clock source	
BIAS 1/2	1 0 0	0010-abX0-X	C	LCD 1/2 bias option ab=00: 2 commons option ab=01: 3 commons option ab=10: 4 commons option	
BIAS 1/3	1 0 0	0010-abX1-X	C	LCD 1/3 bias option ab=00: 2 commons option ab=01: 3 commons option ab=10: 4 commons option	
TONE 4K	1 0 0	010X-XXXX-X	C	Tone frequency, 4kHz	
TONE 2K	1 0 0	011X-XXXX-X	C	Tone frequency, 2kHz	
$\overline{\text{IRQ}}$ DIS	1 0 0	100X-0XXX-X	C	Disable $\overline{\text{IRQ}}$ output	Yes

8.STANDARD CHARACTER PATTERN